FUNCTION GENERATOR

FOR ELECTROCHEMISTRY

N600-HB305

Manual of Operations

IMPORTANT!

Read the following before using this equipment:

Carefully Follow all instructions and observe all precautions given in this book

www.nadascientific.com

1. SAFETY CAUTIONS

1.1 FOR THE SAFE USE

Prior to use of the unit, peruse this operation manual and understand the contents thoroughly. Keep this manual within the range of reach to quick reference anytime necessary.

1.2 DISPLAY

This product as well as this operation manual show several marks to prevent any danger or physical damage and to use the product safely. The meanings of respective marks are as follows;

This shows matters which may cause dangerous statusand possibility of death or serious injury if the apparatus abused.

This shows matters which may cause dangerous status and possibility of middle level or light level of injury or physical damage only if the apparatus is abused.

REQUIREMENTS: This shows matters necessary action and operation tosecure safety.

Shows matters forbidden (must NOT be done)
Shows matters of forcible (must do)
Shows matters of danger
Shows matters of caution

1.3 CAUTIONS IN INSTALLATION

DANGER

• Do not install the unit at placs where inflammable and explosive gas league is suspected. Otherwise it may cause fire

CAUTION

•Avoid installation at following places. Otherwise it may cause fire.
- •Where corrosive gases are generated.
- •Dusty places
- •Places of vibration and shaking
- •Under the direct sun beam or near heating appliances
- •Places with splashes of water
- •Places with condensation due to rapid temperature change
- •Places with out specified temperature and humidity conditions
- •Near by electric appliances which generated strong electromagnetic flux.

•Install the unit horizontally to use:

1.4 CAUTIONS IN HANDLING

CAUTION

•Peruse safety cautions and operation manual and understand the contents. If abused, it may cause fire, electrification or injury.

•Turn power off and stop operation at the abnormal shown below. Otherwise it may cause fire, electrification and trouble. Call suppliers for repair.
- When it is broken
- Abnormal smell or abnormal sound
- Overheat or smoke generation

•Do never disassemble, modify or repair the unit. Otherwise it may cause fire, electrification of trouble. Call suppliers for repair.

1.5 CAUTIONS ABOUT POWER SOURCE

⚠ CAUTION ⚠

•Connect ground wire correctly. Otherwise it may cause electrification of trouble due to leakage.
•Do not use other power cable than supplied along with the apparatus. Or do not injure or work the cable. It may cause fire or electrification.
•Do not touch the power plug with wet hands. Otherwise it may cause electrification.
•Replacement of fuse shall be done after extracting power plug from the receptacle. Otherwise it may cause electrification.

1.6 CAUTIONS IN OPERATION

⚠ CAUTION ⚠

•Do never touch output cord or do never short circuit.
Otherwise it may cause electrification or failure. When touching output cable, turn power off.

1.7 REQUIREMENT FROM MANUFACTURER

(1) It is forbidden to copy or reprint the contents of this manual partly or entirely. The contents may be revised in future without notice.
(2) Should any inconvenience or doubt found in this manual, give notice to manufacturer.

INDEX

1. SAFETY CAUTIONS

2. INSTALLATION

3. OPERATION

4. SPECIFICATIONS

2. INSTALLATION

2.1 GENERAL DESCRIPTION

This apparatus is a signal generator for electrochemical measurement. This gives potential regulatory to potentiostat/ galvanostat.

2.2 FEATURES

Possible to output various waveform from basic waveform such as ramp wave, step wave to arbitrary waveform.
By means of 16bitDA converter, high resolution is obtained.
High accuracy of DC output potential set of ±0.05%±0.5mV is realized.
Provided with fundamental memory of respective waveform and 10 kinds expansion memory.
Setting from PC is possible through USB
Acquiring or output of start/stop signal externally.

2.3 ACCESSORIES

Names	Contents	Qty	Remarks
Signal output cable	Coaxial cable (BNC, banana plug)	1 pc	Standard accessories
Power cord	3P cord	1 pc	
Ground 15A adapter		1 pc	
Main body ground wire			
Operation manual			
USB cable	KU20-15BKH 1.5 m	1 pc	Optional extra. Required to control from PC.

2.4 APPLICABLE PC ENVIRONMENT

In case of controlling the apparatus from PC, PC shall have following specifications.

OS	Windows XP Professional/XP HomeEdition/Windows 2000 Professional/Windows Vista Business
USB environment	USB1.1
Communication software	Hyper terminal etc.(It is not supplied along with Vista machine. Use communication software fold on market or free software in such a case)

* Windows 95/98/ME/NT are not supported.

2.5 NAMES OF RESPECTIVE PARTS

Front Panel

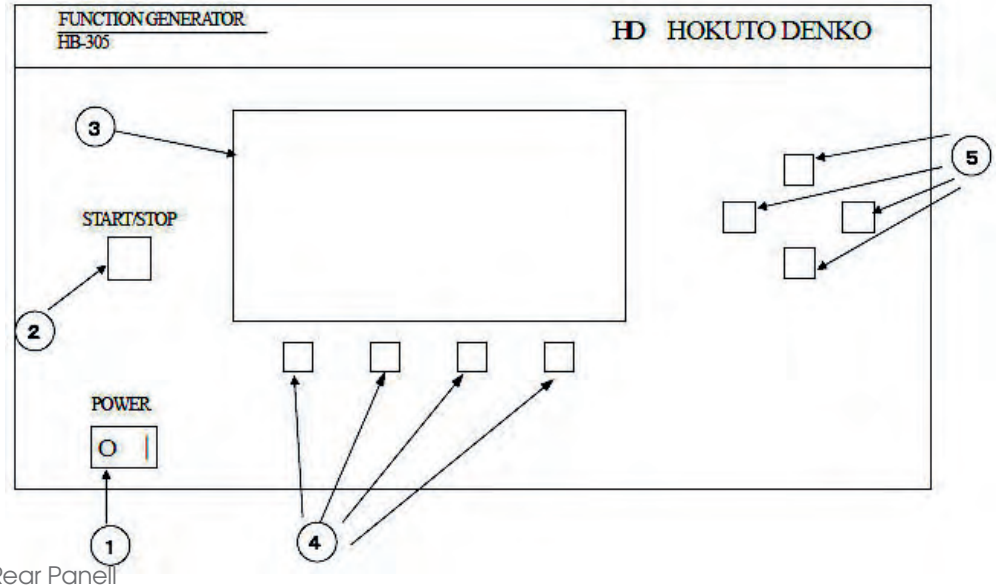

Rear Panell

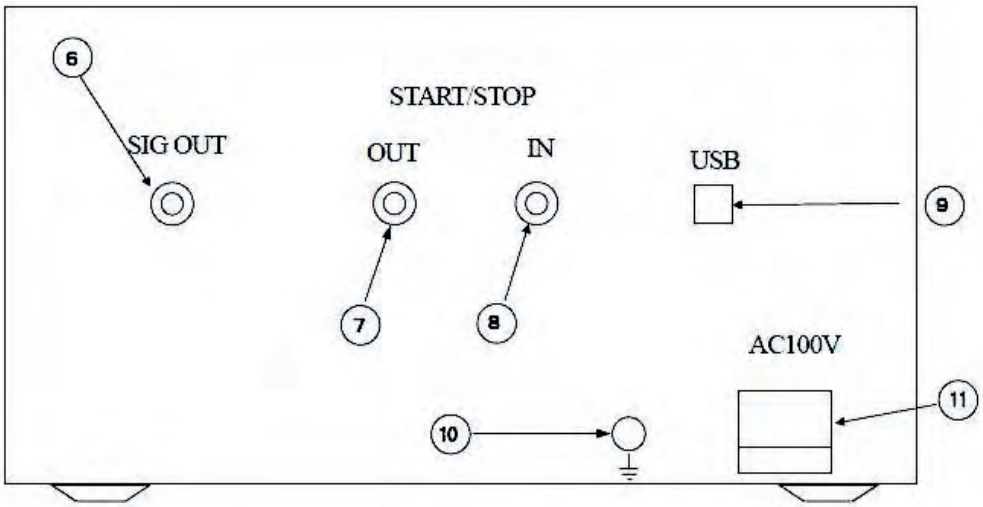

No.	Names	Explanations	Reference
①	Power switch	Turns power on or off	Chapter 2.7
②	START/STOP switch	Starts or stops designated waveform. when the light of this switch is off and LCD display is monitor screen, press this switch to start waveform.	Chapter 3.1
③	LCD display	Displays waveform set/waveform output status	Chapter 3.2
④	Function key	Switch for selection of function on LCD panel	Chapter 3.4
⑤	Arrow keys	Switch to modify selection on LCD panel	Chapter 3.4
⑥	SIG OUT	Waveform output	Chapter 2.6.1
⑦	START/STOP OUT	Outputs status of START and STOP	Chapter 2.6.3
⑧	START/STOP IN	Input to control start/stop of set waveform	Chapter 2.6.3
⑨	USB connector	to connect with computer	Chapter 2.6.2
⑩	Unit case Ground terminal	Ground terminal of the case. (common to ground wire in 3P power cord) In case connection with ground wire of the power source is not possible, use ground wire supplied along with.	Chapter 1.5
⑪	Power in connector	100VAC input (connect power cord supplied) incorporated with a fuse box.	Chapter 1.5

2.6 LCD DISPLAY CONTRAST ADJUSTMENT

Turn power ON. Press arrow keys repeatedly to set "System Mode" at the center.

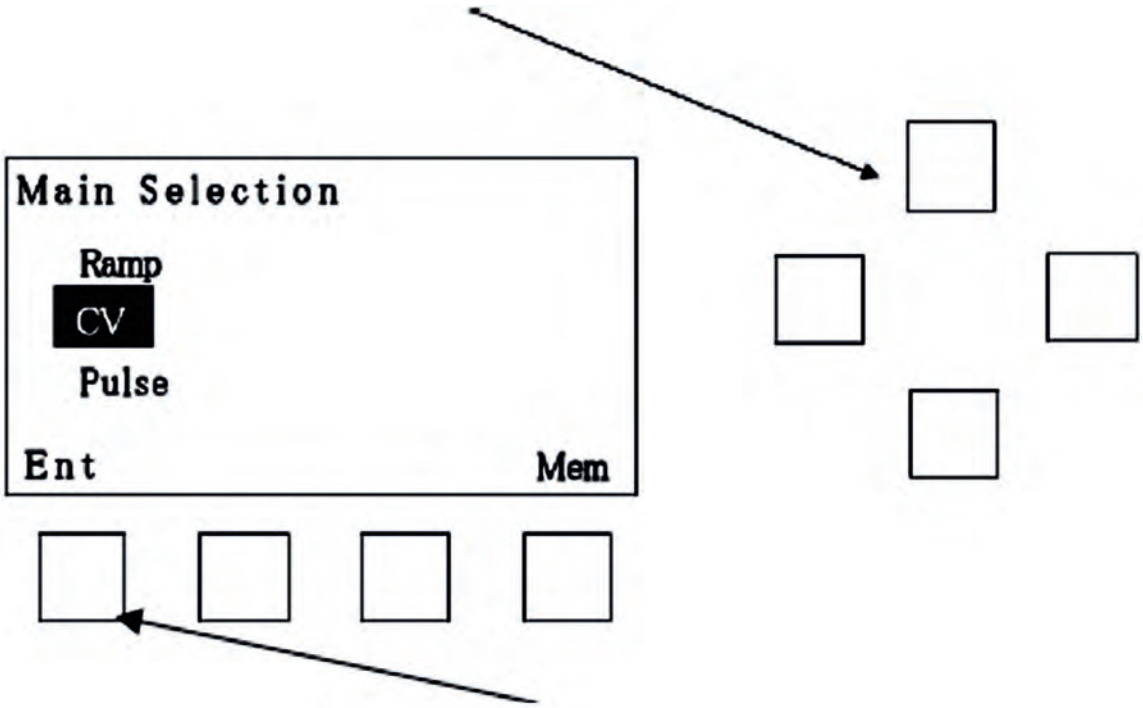

This is a touch panel screen. Press Ent at the left bottom. Following screen appears.

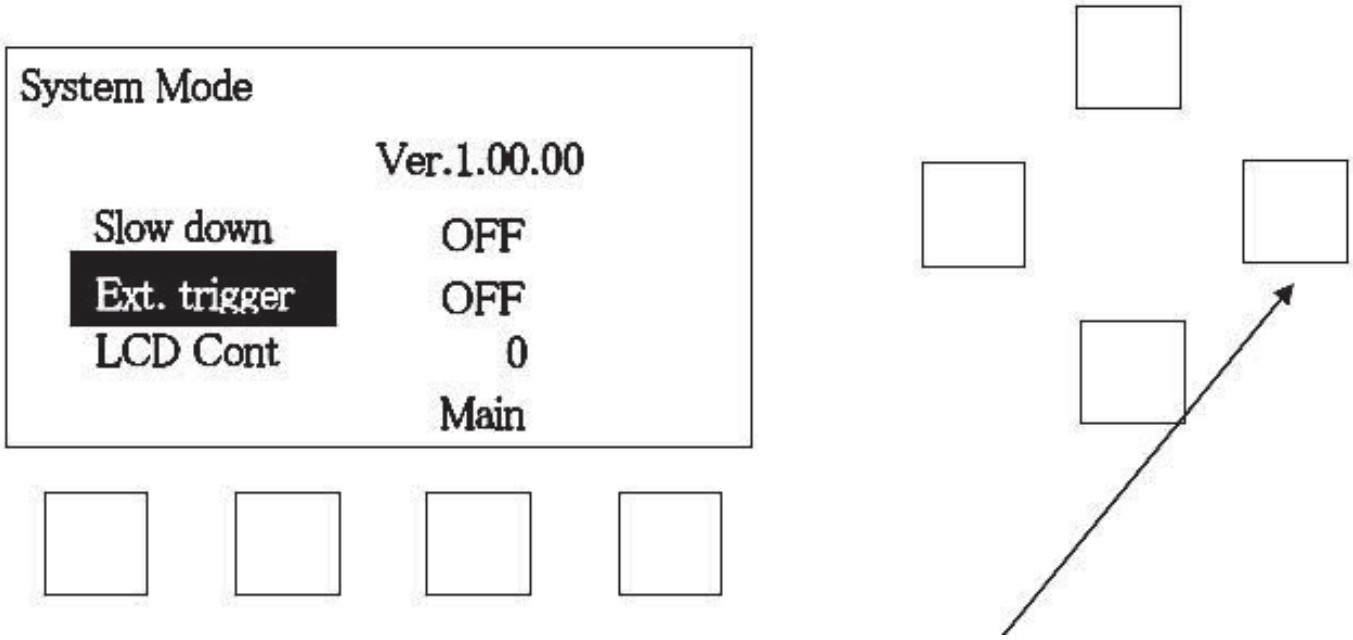

Press Down arrow key to set LCD cont at the center. Then, press right arrow key. Figures are reverse displayed. At this status, Press up arrow key or down arrow key to adjust contrast of display. Upon completion, press left arrow key to display LCD Cont reversed. Then, adjusted value is saved.

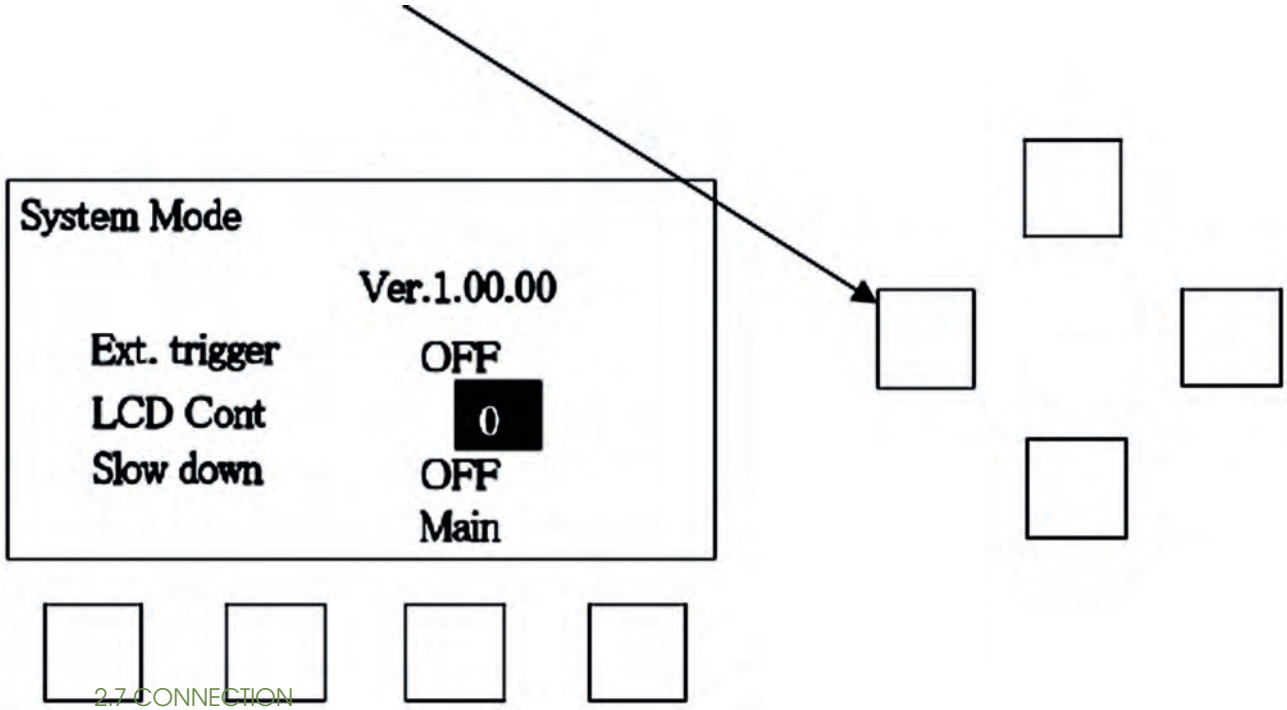

2.7 CONNECTION

2.71. CONNECTION WITH POTENTIOSTAT/GALVANOSTAT

Connect SIG OUT with external input terminal of Potentiostat/Galvanostat using signal output cable supplied along with the apparatus. Refer to operation manual of the Potentiostat/Galvanostat to be used explaining how the output voltage of this unit applies to the sample.

2.7.2 CONNECTION WITH PC

In case of controlling this unit from PC, use USB cable. (KU20-15BKH Sanwa Supply or equivalent is recommended). Connect USB terminal of PC with the USB terminal of this unit. As for the set of PC, refer to Chapter 4.2.

2.7.3 CONNECTION START/STOP IN/OUTPUT

IUse a cable with BNC connector. The cable usable with the connector and cables are supplied provided detailed specifications of them are informed.

2.8 POWER

2.8.1 TURNING POWER ON

Turn power on. LCD panel displays. At that time, signal output (SIG OUT) is insulated from inside.
Note : If the power is turned on and off within a short time, LCD may not display. In such a case, turn power off once and turn on again after 1 second.

2.8.2 TURNING POWER OFF

Power can be turned off any time. However, it may happen that the condition at the middle of the set may not be saved depends on the timing. Refer to Chapter 3.1.

3. OPERATION

3.1 GENERAL DESCRIPTION OF OPERATION

On this unit, major operation is done by arrow keys and function key according displayed on the LCD panel. Screen is divided into two; one is to set wave form and the other is to monitor output voltage. After input of set value in the waveform set screen press Ent of the function key. It goes to monitor screen. All waveform except arbitrary is saved instantaneously in the fundamental memory. Saved set continues even after power is turned off. When power is turned off before pressing Ent, the set at that time is not saved.
When entering into monitor screen, VO set value is output to signal out (SIG OUT). After that press START/STOP button. This switch gets lit on and starts waveform. After finishing waveform, set potential of the last is held. By pressing START /STOP key again, it returns to VO set value and gets lit off. This output voltage continues output until difference VO is set.

Press Edit key at monitor screen. it goes to waveform set screen. When moving to waveform set screen while START/STOP lights on it is not possible to move from currently going waveform to other waveform. However, the alteration of parameter on that wave form is possible. When moving to waveform set screen while START/STOP switch lights off, the waveform alteration is possible.
When using this unit in combination with Potentiostat/Galvanostat, following procedure is recommended. Set waveform and go to monitor screen (in other words VO is output). Then, set Potentiostat/Galvanostat to external input acceptable status and potential or current control status. At that time, VO is applied to sample. Now press START/STOP switch of the unit. The generated waveform on this unit is applied to cell. After completion of the waveform it releases potential or current control. In case of controlling sample by VO before releasing, press START/STOP switch preliminary.
Refer to operation manual of the Potentiostat/Galvanostat to be used explaining how the output voltage of this unit applies to the sample.

- Absolute value control and relative value control

For applying potential to the sample using this unit and potentiostat, 2-ways namely absolute value control and relative value control are available.

- Absolute value control

Set internal set voltage of potentiostat as 0V and determine the potential given to the sample by this unit. This is convenient when the desired set voltage is known, regardless with natural potential.

- Relative value control

Set internal set voltage of potentiostat to e.g. natural potential and set 0V to 0V on this unit and set V1 to the desired voltage. This is convenient when set potential against natural potential is determined.

3.2 SELECTION OF WAVEFORM

Turn power switch on. Waveform selection screen (Main Selection) is displayed. When Main is displayed at function key at respective screens, press them to come to this screen.

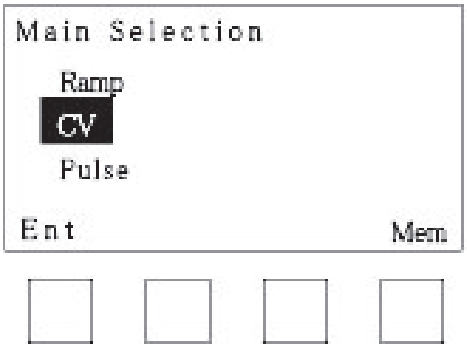

Set desired waveform at the center of the screen by UP and DOWN keys. Then, press Ent of function key to go to selected waveform set screen. At Pulse and Special, it goes the screen providing further detailed selections. Press Mem of function key to go to the screen in which memory function of the unit is handled. As for the details, refer to Chapter 3.5.

All waveform types and configuration of its screen is as shown below.

Selectable waveform types and screen configuration

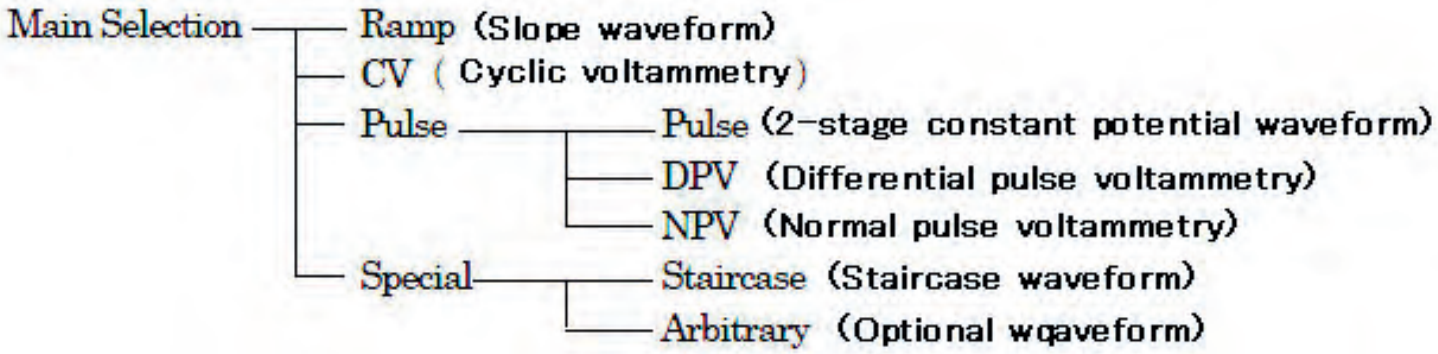

3.3 SET OF WAVEFORM

Parameters which can be set at respective waveforms are as follows; The thick solid line in the drawing expresses change of output potential. Thick dotted line expresses movement when the cycle is more than 2.

Ramp

VO(initial potential), V1(last potential), Scan (Scan rate), Cycle (Repeat time)

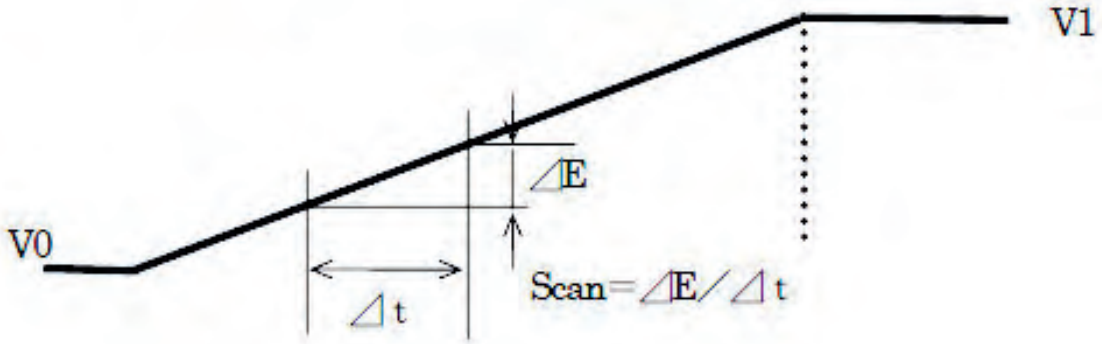

CV

VO(Initial potential), V1(1set reach potential) V2(2nd reach potential) Scan(Scan rate), Cycle (Repeat time)

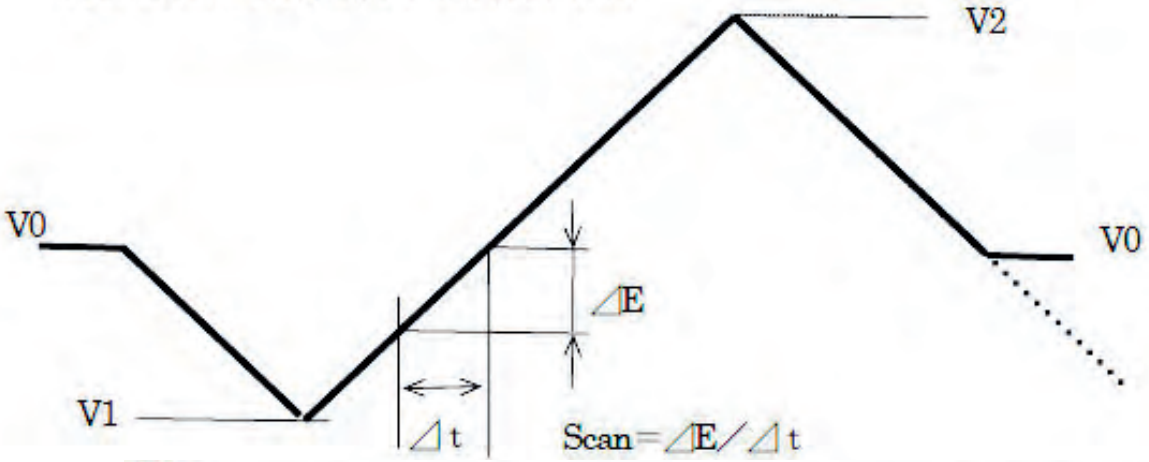

Pulse

VO (initial potential), V1 (1st set potential), T1(1st set hold time), V2(2nd set potential), T2(2nd set hold time), Cycle (Repeat time)

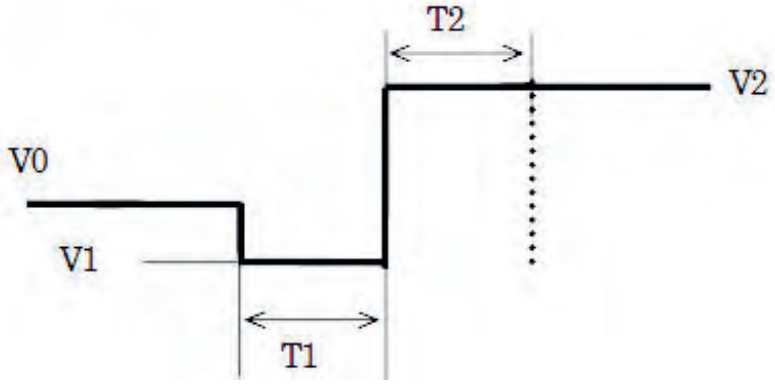

NPV

V0(Initial potential), V1(Last potential), ⊿E (Step increase voltage),
Period (Pulse frequency) Width (pulse width)

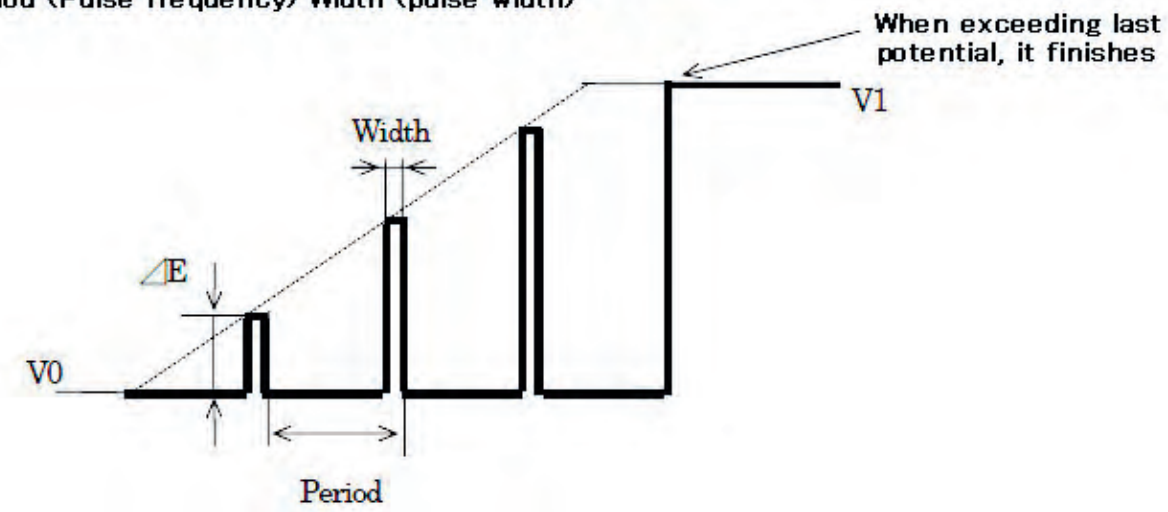

DPV

V0(Initial potential), V1 (Last potential) ⊿E(Step increase voltage),
Period (Pulse frequency) , Width (pulse width)、

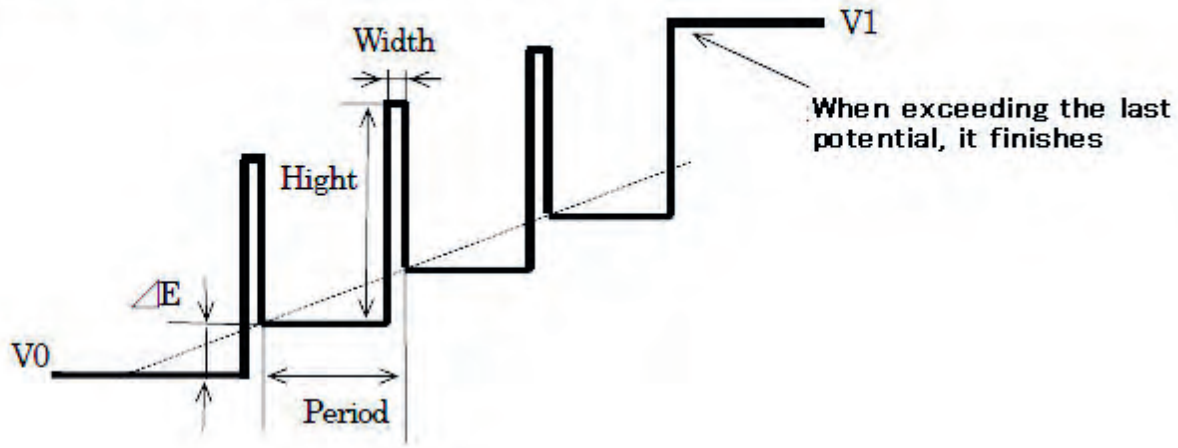

Staircase

V0 (Initial potential), V1(Last potential) ⊿E(Step increase voltage),
T1(Step hold time, Cycle (Repeat time)

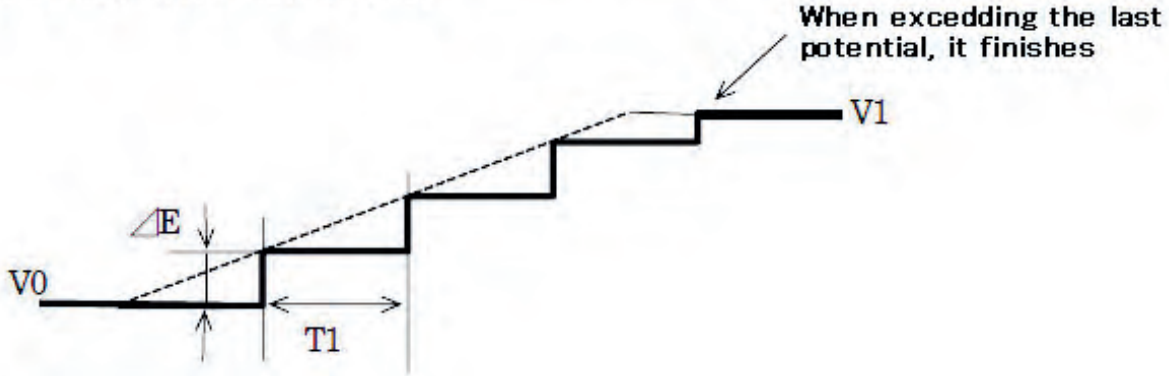

Arbitrary
Cycle (Repeat time)

In case mode is Ramp

V0 (Initial potential), V1 (Last potential), Scan (Scan rate)

In case mode is Hold

V1 (1st set potential), T1 (1st set hold time)

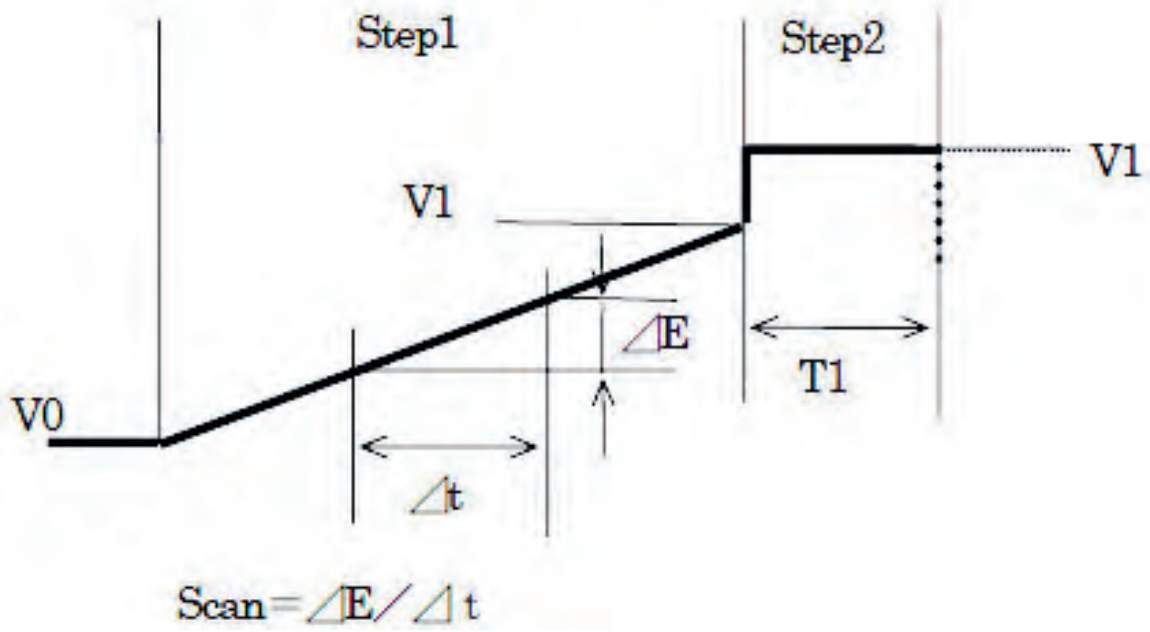

The range of respective parameter set is as follows;

Parameter	Max.	Min.	set resolution	Unit	Remarks
Cycle	999	0	1	NIL	0 repeats until STOP is pressed
V0, V1, V2	+999mV	-999mV	1mV	mV	V1≠V2
⊿E	999mV	1mV	1mV	mV	
Scan	999.9mV/s	0.1mV/min	0.1mV/s, 0.1mV/m	mV/s, mV/m	
T1, T2	999.99min	0.01ms	0.01ms, 0.01s, 0.01m	ms, s, m	
Period	999s	0.2ms	0.1ms	ms, s	Period>Width
Width	998s	0.1ms	0.1ms	ms, s	Period>Width
Height	999mV	1mV	1mV	mV	

3.4 OPERATIONAL PROCEDURE

Ramp and arbitrary are explained as examples.

3.4.1 RAMP

Select Ramp from Waveform selection screen (Main Selection). Following screen appears.

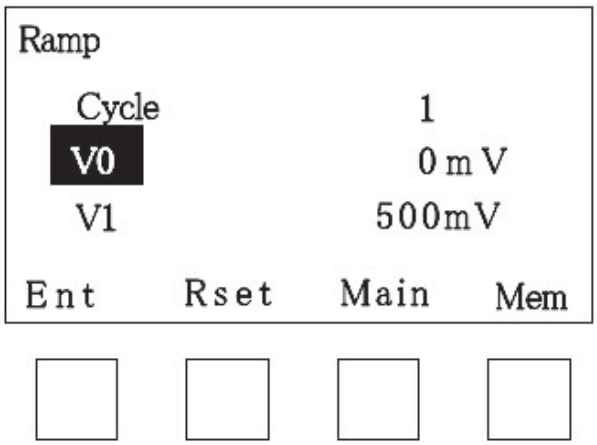

Here, the parameters shown in Chapter 3.3 can be set. Parameter set procedure is as follows.
Move the desired parameter to the center by up and down arrow keys. Then move to the column of selection of desired value set by means of left and right arrow keys. Press up or down arrow key at that column to select figure or column to be selected. Upon completion of set of the respective columns, return to parameter selection column by left and right arrow key. From here, select next parameter.
Upon completion of set of all parameters, press Ent of function key, Set is now saved in fundamental memory and goes to monitor screen. Now the signal output is V0 potential. Press START/STOP switch. Waveform starts.
If Rset is pressed prior to pressing Ent, all parameters are reset. If power is turned off before Ent is pressed, the set is not saved

3.4.1 RAMP

Select Special from Waveform selection screen (Main Selection)m following screen appears.

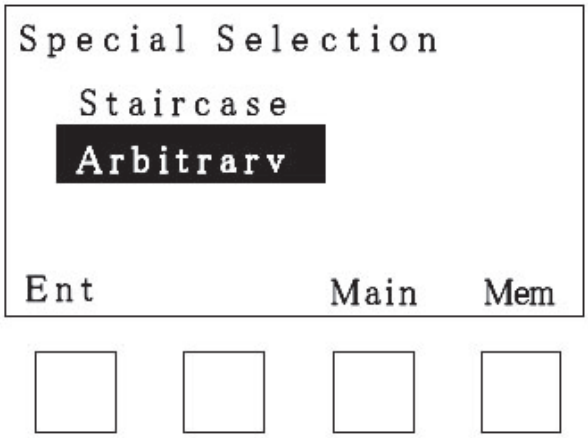

Select Arbitrary. Fundamental screen of arbitrary is displayed. Display of upper right is total step number of arbitrary. When step number is altered, it is reflected here.
Outline explanation on arbitrary set is as follows.
3-4-2-1 Determine total step number by addition or deletion of step in the Edit Sequence screen.
3-4-2-2 After step number and mode are decided by the Edit step column of fundamental screen, enter the parameter set screen of the step to execute setting of parameter. Repeat the ame per step.
3-4-2-3 Set cycle number in fundamental screen.
3-4-2-4 Complete setting by Execute and preparation of waveform output completes.

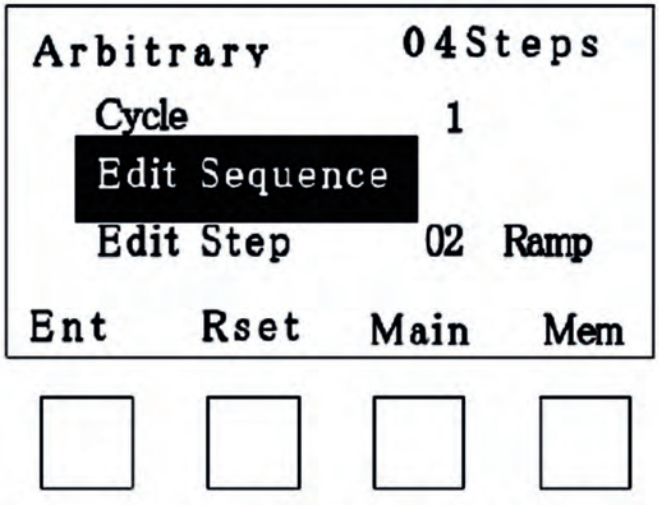

Details of the arbitrary set procedure is explained hereunder.
(1) Exit Sequence
Select Edit Sequence and press Ent. Following screen appears.

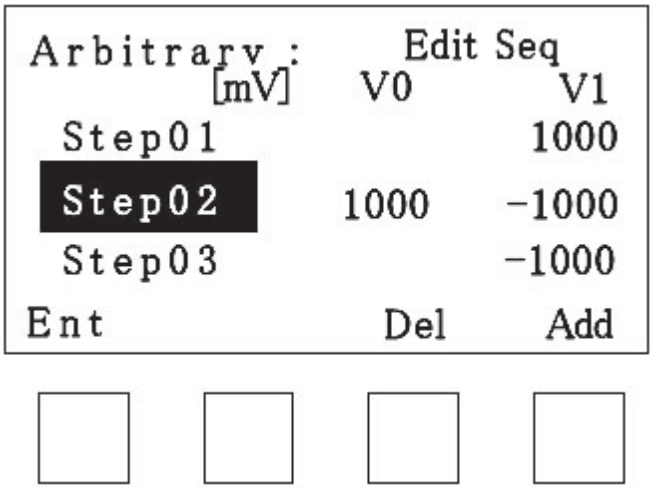

Addition and deletion of the step can be done here. Set of parameters of the added step is done on Edit Step screen. V0 and V1 columns displays set potential of respective steps. When the set mode of step is Hold, V0 is not displayed.
Press Add of function key. The middle step goes up and new step is inserted. This new step is inserted with exactly same set with previous one. However, step number increases by one. Subsequent steps increase by one, respectively.
Press Del of function key. The middle step is deleted. After Del is pressed, "Delete! Rset/Del" is displayed. Select Del for delete and select Rset for canceling. When step is deleted, bottom step goes up to middle. Step number also decreases by one by one.
Press Ent to go back to the fundamental screen of arbitrary. Now, step number is saved in fundamental memory. If addition or deletion of step is done in this screen, it is not cancelled. It is recommended to save arbitrary into expanded memory. If power switch is turned off before pressing Ent, step addition or deletion are not saved.

(2). Edit Step
After returning to fundamental screen of arbitrary, move Edit Step to the center by UP and DOWN arrow key. And move to step number by left and right arrow keys. Select step number of which parameter is to be set. Then, move it to extreme right by left and right key and select either Ramp or Hold (constant potential output) as a mode of this step. Press Ent of function key to go to Edi Step screen.

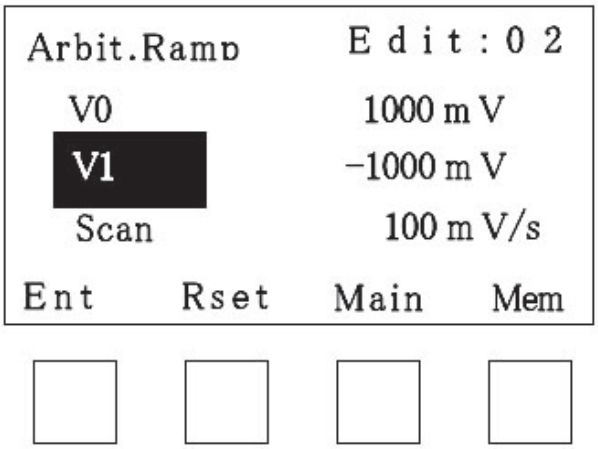

When parameter is modified step number is displayed at the top. Confirm this. The parameters of V1 and T1 can be set when mode is Hold. V0, V1 and Scan parameters are set can be set when mode is Ramp. After alteration of set, press Ent. Parameter of this step is saved in fundamental memory and it goes back to fundamental set screen of arbitrary. Press Rset to cancel the altered set and it returns to the status when entered to Edit Step. Also in case that set alteration is not done and return to fundamental screen of arbitrary, press Ent. This time cursor locates at the step number, Press left arrow key to move the cursor to Edit Step.

(3) 3. Set of Cycle

Select Cycle in fundamental screen and set cycle number.

(4) Execute

Select Execute in fundamental screen and press Ent . Set of Cycle and set of Step mode are saved in fundamental memory and go to monitor screen. Press START/STOP switch here. Waveform is output. In case of arbitrary, parameter can not be changed while waveform is generated.

(5) Show steps

There is Show step in the choice in fundamental screen. Select this and press Ent. The outline of the set waveform can be confirmed.

3.4.3 MONITOR SCREEN

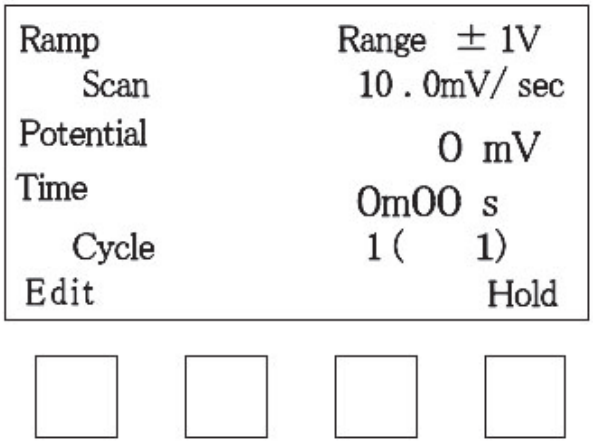

Range displays voltage range of signal output. There are 3 ranges of ±10V, ±2V and ±1V. which are selected by the unit automatically in accordance with the set values of V0 and V1. Details are as follows;

When the set value of V0 or V1 exceeds ±2000mV, it works on ±10V range. When the set values of V0 and V1 are both within 2000mV and either one exceeds ±1V, it works on ±2V. When the set values of both of V0 and V1 are within ±1000mV, it works on ±1V range. Scan displays set scanning rate. Potential displays current output voltage. Time displays elapsed time from Start. Cycle displays current cycle number and remaining cycle number (in bracket). The remaining cycle number is displayed including currently proceeded cycle. At the end of the last cycle, it displays 0. By pressing Hold of function key while waveform is being generated, the unit stops scanning and keeps voltage constant. Hold is highlighted. By pressing it again, Hold is released. In CV waveform, Revr of function key is displayed. Press this to reverse scanning direction. Cycle does is not counted even after the scanning direction is reversed by Revr. At arbitrary Next of function key is displayed. Press this to go to next step. Edit of function key is used for returning to parameter set screen. Press this key while waveform is being generated. It becomes possible to alter the set parameter while generating waveform. Press Ent of function key. New parameter is reflected. Parameters which can be altered are displayed highlighted. Parameter alteration exceeding voltage range during operation is not possible..

3.5 SET OF MEMORY

The memory of this unit has following 3 kinds of categories.

Fundamental memory : Set of respective waveform is saved in non-volatile memory. When waveform is selected in Waveform selection screen (Main Selection), this content is loaded in current memory. The contents of current memory is automatically saved when Ent of function key is pressed to move from waveform set screen to monitor screen. At arbitrary, the period of save is slightly different. Refer to 3.4.2.

Expansion memory : It is possible to save up to 10 kinds of set into a non-volatile memory. It is possible to save and load at Memory operation screen.

Current memory : Set contents loaded from fundamental memory or expansion memory are saved in RAM. The contents are renewed every time when set parameter is altered. Set contents saved in expansion memory is the contents of the current memory of that time. This content is deleted when power is turned off.

Expansion memory usages are as follows.
When Mem is displayed at function keys of respective screens, press this to go to memory operation screen.

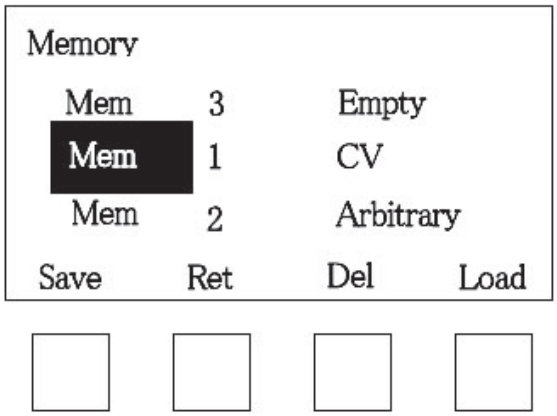

10 kinds of Mem can be selected and operated by UP and DOWN arrow keys. With each Mem, numbers and types of waveform are displays. As for the Mem of which set is not saved is displayed as Empty. Select a Mem of which set is saved and press Load of function key. Its waveform is loaded. Screen moves to waveform set screen. In order to generate its waveform press Ent to go to monitor screen. For saving waveform set, press Save of function key. In case selected Mem is Empty, contents of current memory is saved as it is.. And the name of its waveform is displayed. In case other set is saved in the selected Mem, Overwrite?/Save/Rset is displayed. Press Save to overwrite. Press Rset to cancel saving. For deleting contents of Mem, press Del. Delete?/Rset/Del is displayed to confirm. Press Del to delete. This cancels set contents of the waveform. Display of waveform is Empty. Press Rset to cancel the deletion. Press Ret of function key for moving to previous screen before entering Memory screen.

3.6 SYSTEM MODE MENU.

System Mode can be selected in the waveform selection screen after power is turned on. System setting can be done, here. Also version of the built-in program can be confirmed. Returning to previous screen from this screen, press Main of function screen. The following items can be selected in this screen.

- Slow down
- Ext. Trigger
- LCD Cont

Slow down : Set rate of output voltage returning to V0 when pressing START/STOP switch after waveform finishes. Set to On. It returns to V0 in 2 seconds with slashing of START/STOP switch. Set to Off. It returns to V0 instantaneously. Default set is Off.

LCD Cont : Use for contrast adjustment of LCD screen.

Ext. Trigger : Use to select START/STOP input function on the rear panel. In case of Off, Start/Stop of rear panel dues not function. Set to ON.LS or ON.HS to use this input. In this case input signal overrides Start/Stop switch of front panel or remote control. Consequently, when the input signal is at stop status, it is not possible to start from Start/stop switch of front panel of remote control. When input signal is Start status, and start/stop switch or remote control set to stop. it stops waveform generated by that time and then start to generate new waveform. When it is set to ON.LS it does not function with the change of input signal of lower than 100 ms. When it is set to ON.HS, it functions with the short time (shorter than 10 μs). In the circumstances where the noise is easily picked up, use ON.LS. To start function generator with high speed synchronous with input signal. use ON.HS.

4. SPECIFICATIONS

4.1 FUNCTION GENERATOR

Output waveform	Ramp waveform, CV(triangle wave) Rectangular wave. DSP. NPV, Staircase wave, 99 step arbitrary
Voltage set range	±9999 mV
Set resolution	1mV
Voltage set range	±10V, ±2V,±1V
DC voltage accuracy	±0.05%±0.5mV of set value (Load 1 MΩ)
Resolution	16bit (approx. 31 μ V at ±1V range)
Scan rate	0.1mV/min.~9999 mV/sec
Step hold time	0.01 ms~999.99 min
Response speed	with 2 μ sec (Step waveform, of 1V, Load 1MΩ)
Set max., cycle no.	999 (Repeats until it is stopped by set of 0)
Max. output	BNC terminal
Output impedance	510Ω

4.2INTERFACE

START/STOP level input	Terminal	BNC terminal
	Input configuration	Pull up photo coupler input to +5V by 1.2 kΩ
	Control input	START by contact short circuit, STOP by open
START/STOP level output	Terminal	BNC terminal
	Input configuration	Pull up photo coupler input to +5V by 1.2 kΩ
	Control input	START over +4.5V, START lower than 0.5V
USB	Terminal	B type receptacle
	Standard	USB 1.1 complied

4.3 SIZE, WEIGHT, ENVIRONMENT AND OTHERS.

Measuring device main unit	size(WHL)	210 x 145 x 330 mm
	Weight	approx. 4.0 kg
Power source	Voltage	100VAC ±10% 50/60 Hz
	Power consumption	lower than 15VA
Operational environment	Temperature	0℃~40℃
	Humidity	10%~90%(no condensation)
	Store temp	-10℃~40℃
	Store humid	5%~95% (no condensation)
	Accuracy guaranteed temperature	23℃±5℃